Student Name: _____

Student ID# _____

	Check which tutorial for pick-up
T01 Tuesday afternoons	
T02 Friday afternoons	

CHEMICAL ENGINEERING 2O04
Midterm #1

Duration 120 minutes (7:00pm – 9:00pm) **D.R. Latulippe**
McMaster University Term Test **Tuesday February 27th, 2024**

SPECIAL INSTRUCTIONS

1. The test includes 6 questions and 1 bonus question; ensure your copy of the test is complete.
2. Marks for each problem are given (**Total of 43 marks)**. Use this as a time-management guide; for example: $1\ mark\left(\frac{120\ minutes}{43\ marks}\right) \sim 3\ minutes$
3. The following materials are permitted during this examination:
   a) The Fox and McDonald's Introduction to Fluid Mechanics textbook (any edition and any version)
   b) Any printed notes or hand-written notes
   c) A tablet or computer in "airplane mode" with a document reader (e.g. Adobe Acrobat, Microsoft OneNote) open to review course material. **<u>Any student caught with a device not in airplane mode and/or with other applications opened will automatically receive a grade of 0 on the test.</u>**
   d) The McMaster Standard Calculator (Casio FX-991MS/MS+)
4. **The following materials are NOT permitted during this examination:**
   a) The internet.
   b) Any calculation software (e.g. Excel, MATLAB).
   c) Any applications to communicate with anyone.
5. Only tests written in pen will be considered if re-marking is requested (addition errors excepted).
6. **On page 11, we have given you a table with some useful conversion factors.**

For grading purposes only

Q1	Q2	Q3	Q4	Q5	Q6	Bonus	TOTAL

QUESTION 1 (11 MARKS)

Answer the following short questions in the space provided:

a.	_____ is the measure of a fluid's ability to resist deforming under an applied shear stress. **(1 mark)**	
b.	Using the information in the figure below, calculate the gauge pressure (kPa) at the deepest point in Lake Ontario. **(2 marks)** 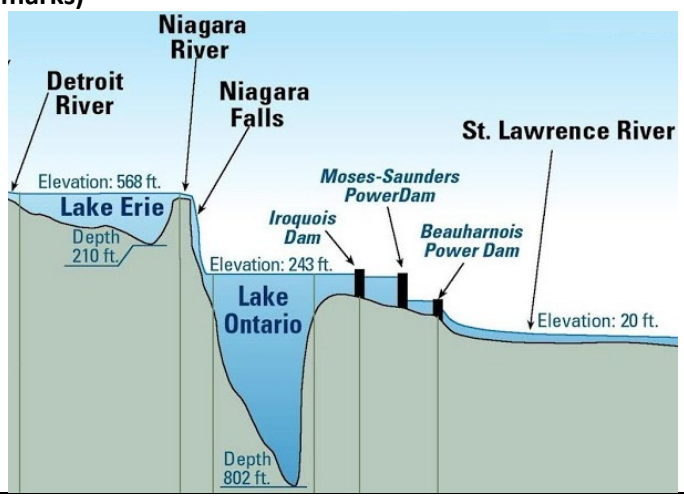 	
c.	The rheological behaviour of Non-Newtonian fluids is often described using the following power-law model: $$\tau = k\dot{\gamma}^n$$ What type of fluid corresponds to values of n less than 1? What type of fluid corresponds to values of n greater than 1? **(1 mark)** On the accompanying figure, sketch the relationship between shear stress and shear rate for those two types of fluids. **(1 mark)**	
d.	Prove that the equation below for volumetric flow rate in a venturi meter (first given on slide 30 of the PDF_04 notes) is 'dimensionally consistent': **(2 marks)** $$Q = \frac{\pi}{4} D_2^2 \sqrt{\frac{2 \cdot (P_1 - P_2)}{\rho\left(1 - \frac{D_2^4}{D_1^4}\right)}}$$ where ρ is the density of the fluid in venturi P_1 is the pressure 'upstream' of the venturi meter D_1 is the diameter 'upstream' of the venturi meter P_2 is the pressure at the 'throat' of the venturi meter D_2 is the diameter of the 'throat' in the venturi meter	

e.	Describe the difference between a Venturi meter and a rotameter in terms of their orientation (i.e. horizontal, vertical) when used in any piping system. **(2 marks)**	
f.	Describe the difference between a Venturi meter and a rotameter in terms of their ability to be used for automated control in any piping system. **(1 mark)**	
g.	The Reynolds number represents the ratio of what two forces? **(1 mark)**	

QUESTION 2 – 6 MARKS

As shown in the top picture to the right, a common demonstration of 'fun science' is the phenomena where sewing needles will "float" on water. Since these needles are made of stainless steel (SG = 7.83) they are much heavier than water and thus do not "float", instead they sit on the water due to surface tension effects.

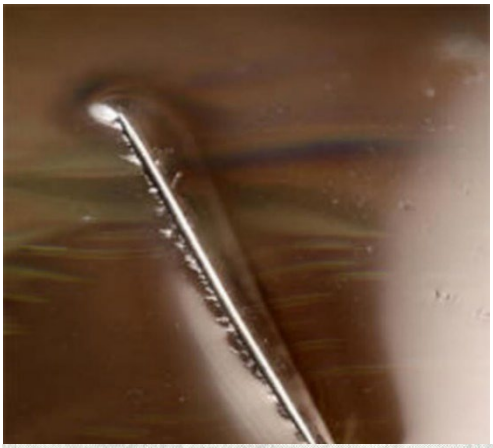

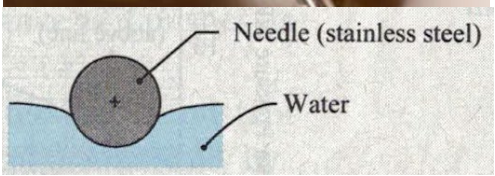

a. Based on the bottom picture to the right which shows a cross-section of needle (assuming it is a perfect cylinder with diameter D and length L), draw the appropriate free-body diagram.

   NOTE: You can ignore the buoyancy force (given small size of needle). Also you can assume that the contact angle at the water-air-needle interface is zero.

   (2 marks)

b. Calculate the largest diameter (mm) of a sewing needle that will rest on the water surface.

   NOTE: Since the needle length L is much greater than the diameter D, you can ignore the contributions of the two ends of the needle on the surface tension force.

   (4 marks)

QUESTION 3 (5 MARKS)

In the accompanying figure, the cross-section of a 3 m wide barge is shown – if the mass of the barge itself is 2,000 kg, calculate the draft (see accompanying figure for physical interpretation) when a 25,000 kg load is put inside the hold of the barge.

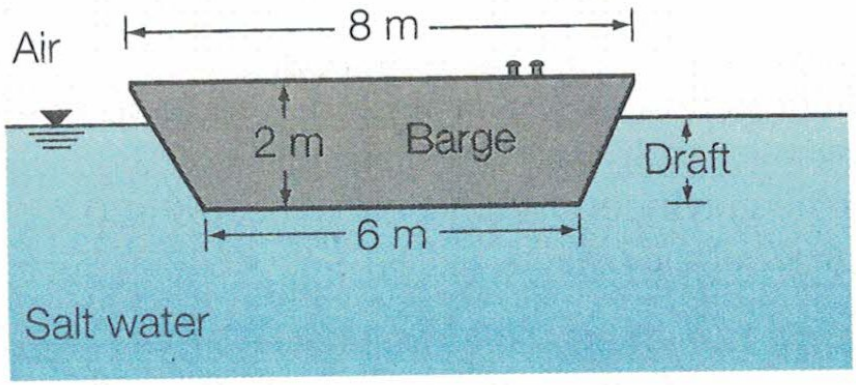

NOTE: The barge is essentially completely open on the inside and thus the buoyancy for the portion above the seawater surface is negligible.

QUESTION 4 (6 MARKS)

As shown in the accompanying figure, an inverted manometer filled with oil is used to indicate the difference in pressure between two points in a vertical pipe through which water (at 10 °C) is flowing. Using the given data in the accompanying figure, calculate the pressure difference (in kPa) between points A and B.

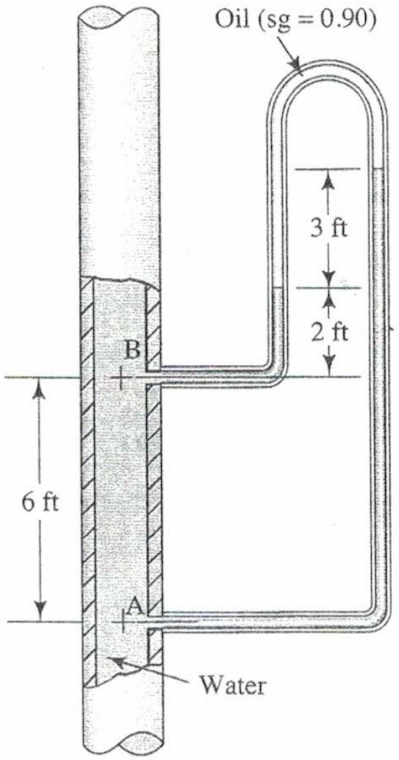

QUESTION 5 (6 MARKS)

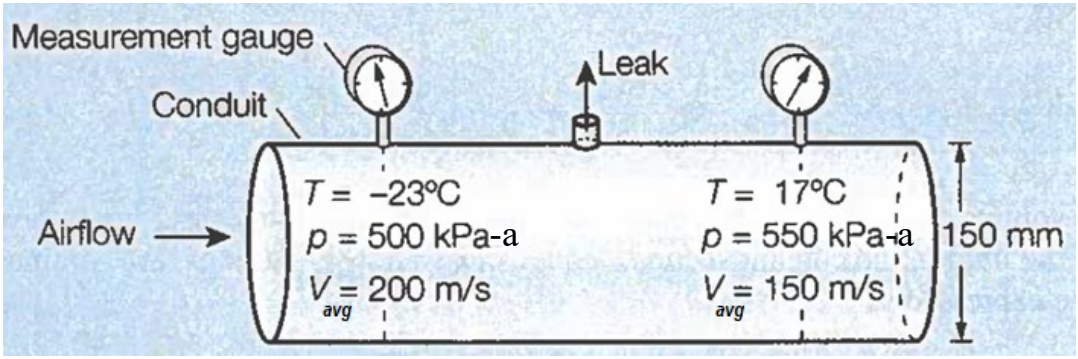

Using the given data in the accompanying figure, calculate the mass flow rate of air (in kg/s) that is steadily leaking out of the horizontal cylindrical conduit at a point approximately halfway between the two pressure gauges.

QUESTION 6 (9 MARKS)

A simple shell-and-tube heat exchanger with one smaller cylindrical tube inside a larger cylindrical tube is shown in the accompanying figure (not drawn to scale).

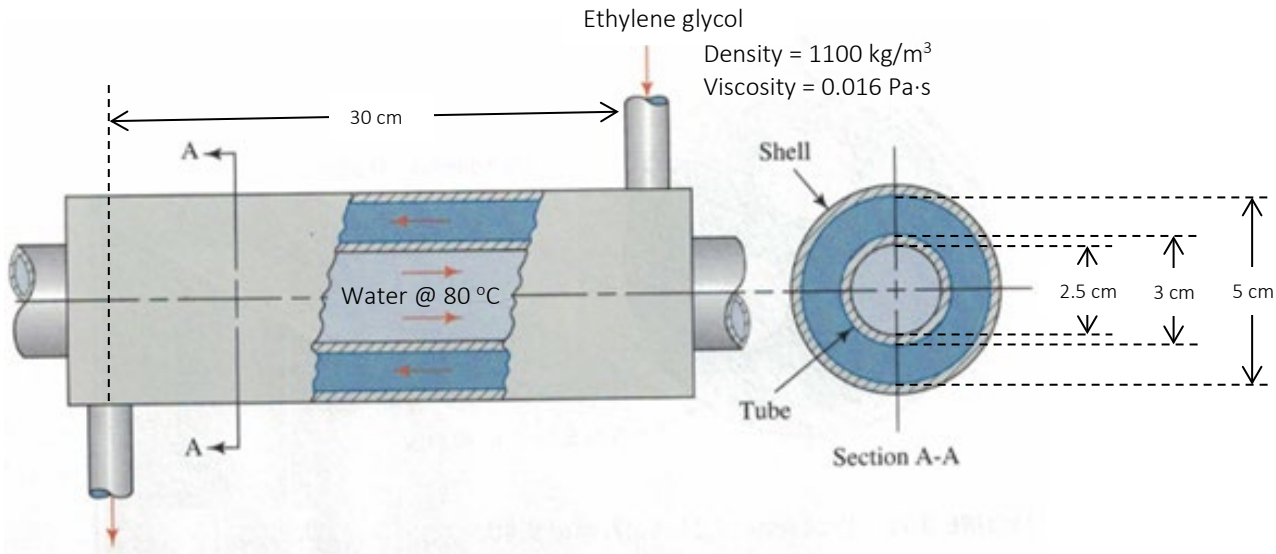

a. If at a hot water volumetric flow rate of 5 gpm (i.e. gal/min) the average water temperature (from inlet to outlet of the heat exchanger) is 80 °C, calculate the Reynolds number in the <u>tube section</u> of the heat exchanger at those conditions. Also, comment on whether the flow is best described as laminar, transitional, or turbulent.
(3 marks)

b. At an ethylene glycol volumetric flow rate of 10 gpm (i.e. gal/min), calculate the Reynolds number in the shell section of the heat exchanger. Also, comment on whether the flow is best described as laminar, transitional, or turbulent.

(4 marks)

NOTE: The appropriate 'characteristic length' to use in the Reynolds number calculation for the annular space of the shell section is the difference between the internal diameter of the shell section and the outside diameter of the tube section.

c. Based on your answers from parts a & b, what changes (if any) would you recommend to improve the operational performance of the heat exchanger?

(2 marks)

BONUS QUESTION (5 MARKS)

Spherical tanks (like the one shown in the accompanying figure) are often used for the storage of cryogenic fluids and specialty fuel products.

a. For the situation of filling an empty spherical tank (of radius R) with a speciality liquid at a fixed rate ($\dot{m}_{inlet}$), determine the general equation for the height of liquid in the spherical tank.
(3 MARKS)

NOTE: a useful relationship for spheres is

$$\frac{d\forall}{dh} = 2\pi Rh - \pi h^2$$

b. Prove that your answer from part a is correct by showing that when it is used to calculate the time to completely fill the spherical tank that it matches the equation shown below:

$$t_{full} = \frac{\frac{4}{3}\pi R^3}{Q_{inlet}}$$

(2 MARKS)

Table G.2

Conversion Factors and Definitions

Fundamental Dimension	English Unit	Exact SI Value	Approximate SI Value
Length	1 in.	0.0254 m	—
Mass	1 lbm	0.453 592 37 kg	0.454 kg
Temperature	1°F	5/9 K	—

Definitions:

Acceleration of gravity:	$g = 9.8066\ \text{m/s}^2$ ($= 32.174\ \text{ft/s}^2$)
Energy:	Btu (British thermal unit) ≡ amount of energy required to raise the temperature of 1 lbm of water 1°F (1 Btu = 778.2 ft · lbf)
	kilocalorie ≡ amount of energy required to raise the temperature of 1 kg of water 1 K(1 kcal = 4187 J)
Length:	1 mile = 5280 ft; 1 nautical mile = 6076.1 ft = 1852 m (exact)
Power:	1 horsepower ≡ 550 ft · lbf/s
Pressure:	1 bar ≡ 10^5 Pa
Temperature:	degree Fahrenheit, $T_F = \frac{9}{5}T_C + 32$ (where T_C is degrees Celsius)
	degree Rankine, $T_R = T_F + 459.67$
	Kelvin, $T_K = T_C + 273.15$ (exact)
Viscosity:	1 Poise ≡ 0.1 kg/(m · s)
	1 Stoke ≡ 0.0001 m^2/s
Volume:	1 gal ≡ 231 in.^3 (1 ft^3 = 7.48 gal)

Useful Conversion Factors:

Length:	1 ft = 0.3048 m	Power:	1 hp = 745.7 W
	1 in. = 25.4 mm		1 ft · lbf/s = 1.356 W
Mass:	1 lbm = 0.4536 kg		1 Btu/hr = 0.2931 W
	1 slug = 14.59 kg	Area	1 ft^2 = 0.0929 m^2
Force:	1 lbf = 4.448 N		1 acre = 4047 m^2
	1 kgf = 9.807 N	Volume:	1 ft^3 = 0.02832 m^3
Velocity:	1 ft/s = 0.3048 m/s		1 gal (US) = 0.003785 m^3
	1 ft/s = 15/22 mph		1 gal (US) = 3.785 L
	1 mph = 0.447 m/s	Volume flow rate:	1 ft^3/s = 0.02832 m^3/s
Pressure:	1 psi = 6.895 kPa		1 gpm = 6.309×10^{-5} m^3/s
	1 lbf/ft^2 = 47.88 Pa	Viscosity (dynamic)	1 $\text{lbf} \cdot \text{s/ft}^2$ = 47.88 $\text{N} \cdot \text{s/m}^2$
	1 atm = 101.3 kPa		1 $\text{g/(cm} \cdot \text{s)}$ = 0.1 $\text{N} \cdot \text{s/m}^2$
	1 atm = 14.7 psi		1 Poise = 0.1 $\text{N} \cdot \text{s/m}^2$
	1 in. Hg = 3.386 kPa	Viscosity (kinematic)	1 ft^2/s = 0.0929 m^2/s
	1 mm Hg = 133.3 Pa		1 Stoke = 0.0001 m^2/s
Energy:	1 Btu = 1.055 kJ		
	1 ft · lbf = 1.356 J		
	1 cal = 4.187 J		

THE END